INSTALLATION OF ACTION UNITS IN FREELANCE TUG FOR MR RON HAUGHTY

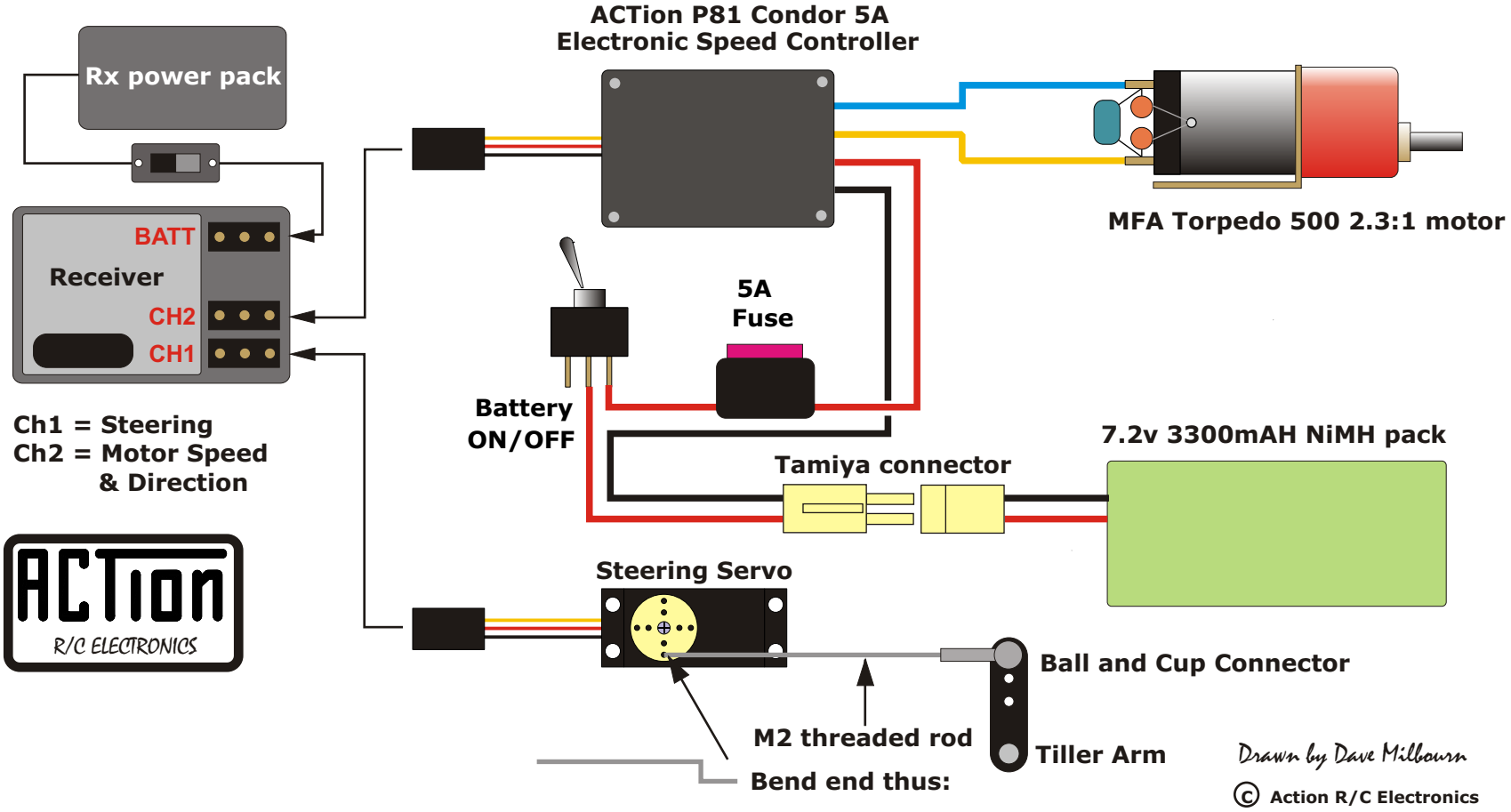

© Action R/C Electronics