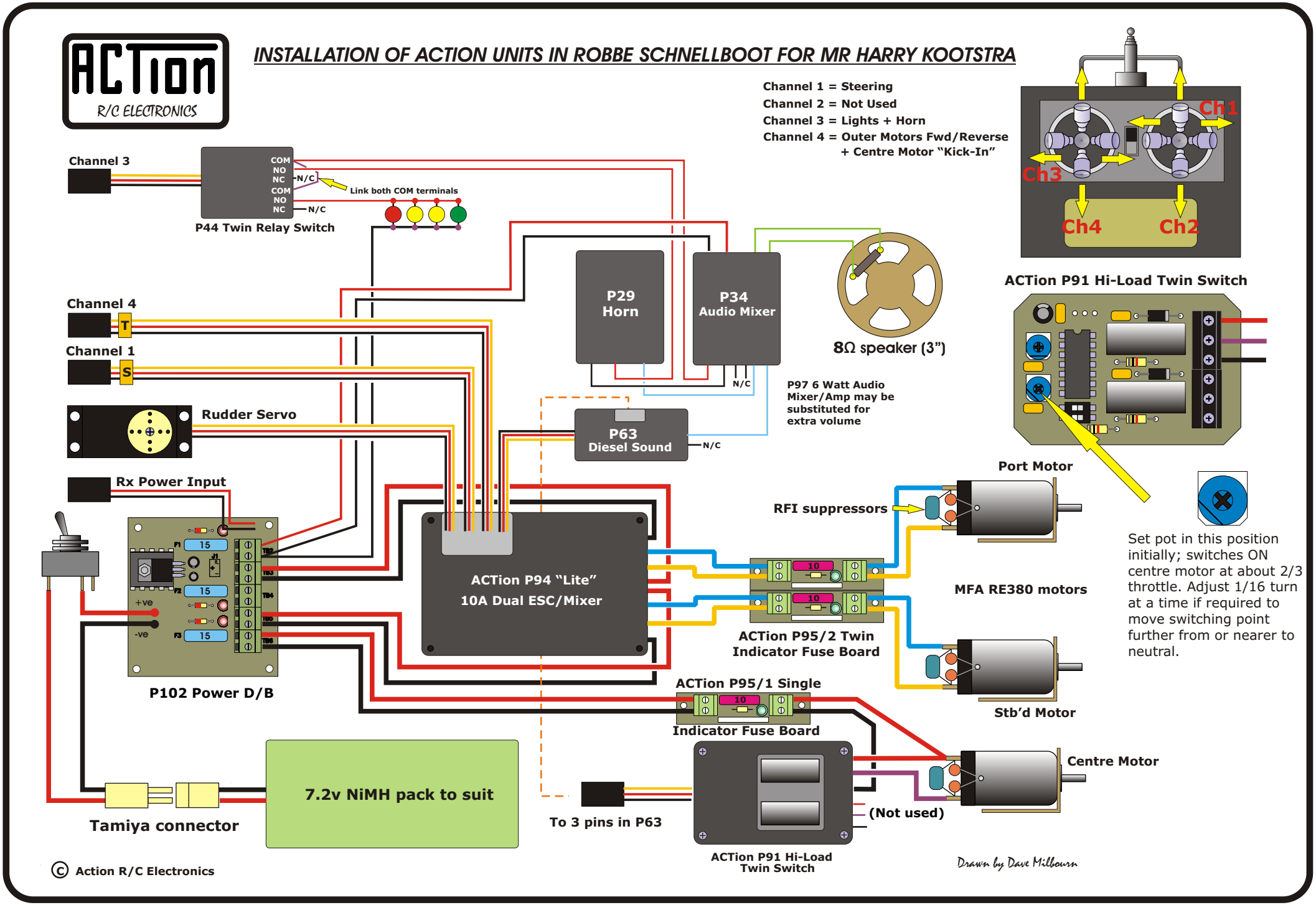
ACTion
R/C ELECTRONICS
INSTALLATION OF ACTION UNITS IN ROBBE SCHNELLBOOT FOR MR HARRY KOOTSTRA
Channel 1 = Steering
Channel 2 = Not Used
Channel 3 = Lights + Horn
Channel 4 = Outer Motors Fwd/Reverse
+ Centre Motor "Kick-In"
Ch1
Ch3
Ch4
Ch2
ACTion P91 Hi-Load Twin Switch
Channel 3
COM
NO
NC
N/C
COM
NO
NC
N/C
Link both COM terminals
P44 Twin Relay Switch
P29
Horn
P34
Audio Mixer
N/C
8Ω speaker (3")
P97 6 Watt Audio Mixer/Amp may be substituted for extra volume
Channel 4
T
Channel 1
S
Rudder Servo
P63
Diesel Sound
N/C
Rx Power Input
Port Motor
RFI suppressors
Set pot in this position initially; switches ON centre motor at about 2/3 throttle. Adjust 1/16 turn at a time if required to move switching point further from or nearer to neutral.
F1
15
F2
15
F3
15
+ve
-ve
TB2
TB3
TB4
TB5
TB6
ACTion P94 "Lite"
10A Dual ESC/Mixer
10
10
ACTion P95/2 Twin
Indicator Fuse Board
MFA RE380 motors
P102 Power D/B
ACTion P95/1 Single
10
Indicator Fuse Board
Stb'd Motor
Centre Motor
7.2v NiMH pack to suit
Tamiya connector
To 3 pins in P63
(Not used)
ACTion P91 Hi-Load
Twin Switch
Drawn by Dave Milbourn
© Action R/C Electronics